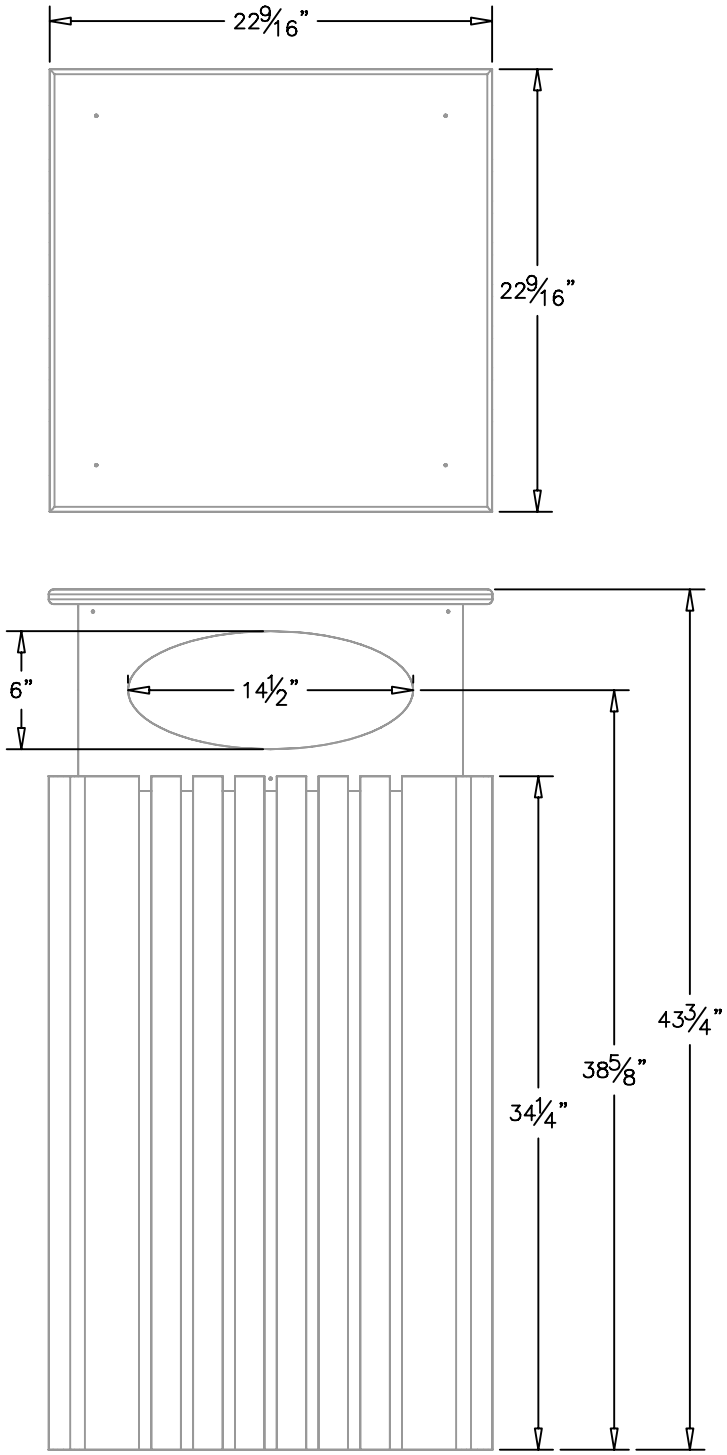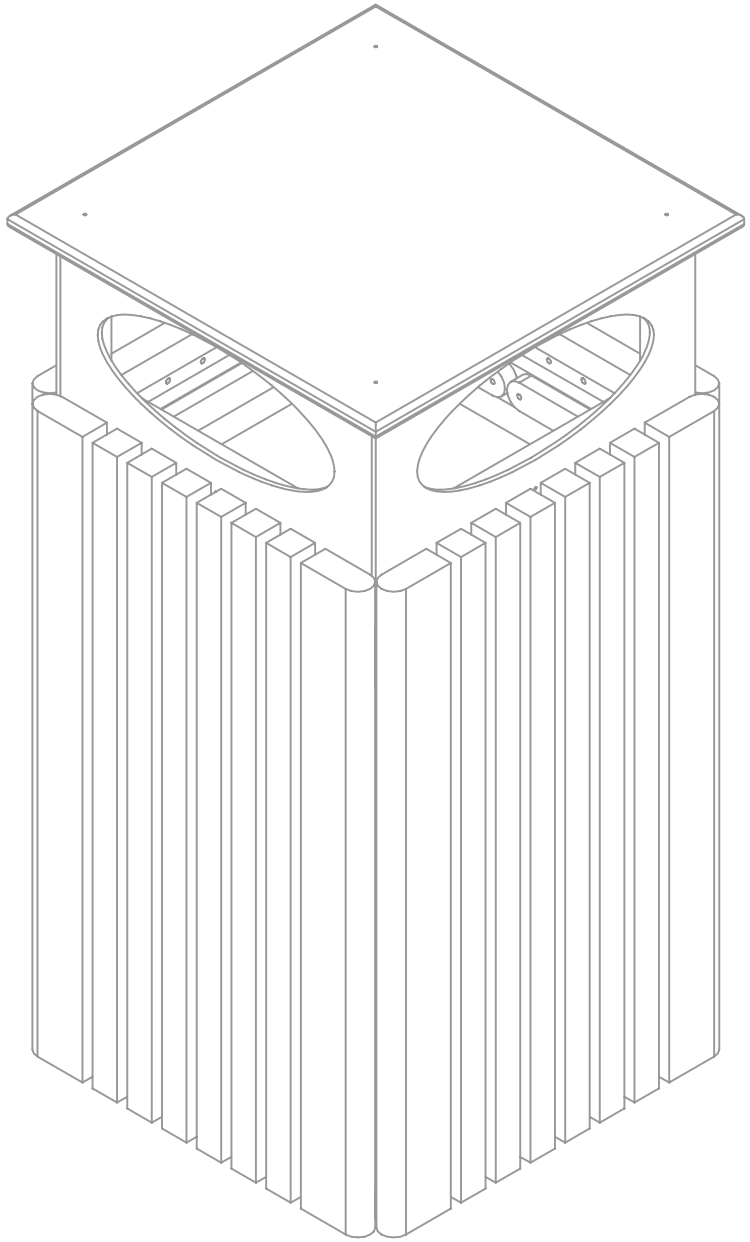ASM-T40C-02